Conductor Bar
Series 815

CONDUCTIX wampfler
DELACHAUX GROUP

Installation Instruction

Single Pole Insulated Conductor Rail Programme 815

MV0815-0001b-E

Order number
0815xx-...

TABLE OF CONTENT

Installation Instruction

Single Pole Insulated Conductor Rail Programme 815

MV0815-0001b-E

1. Introduction

The Wampfler insulated conductor rail, programme 815, is a compact and reliable conductor rail system which is easy and quick to install. The components have been developed to meet the particular requirements of electrical overhead monorails but are also suitable for warehouse storage and retrieval units, testing equipment, machine tools and special machinery etc. The components, which are designed as single-pole units, permit the end-to-end mounting of as many poles as required with a phase spacing of 12 or 14 mms. With the overhead monorail size 180, 12 poles max. can be accommodated, with monorail size 240, 16 poles max.

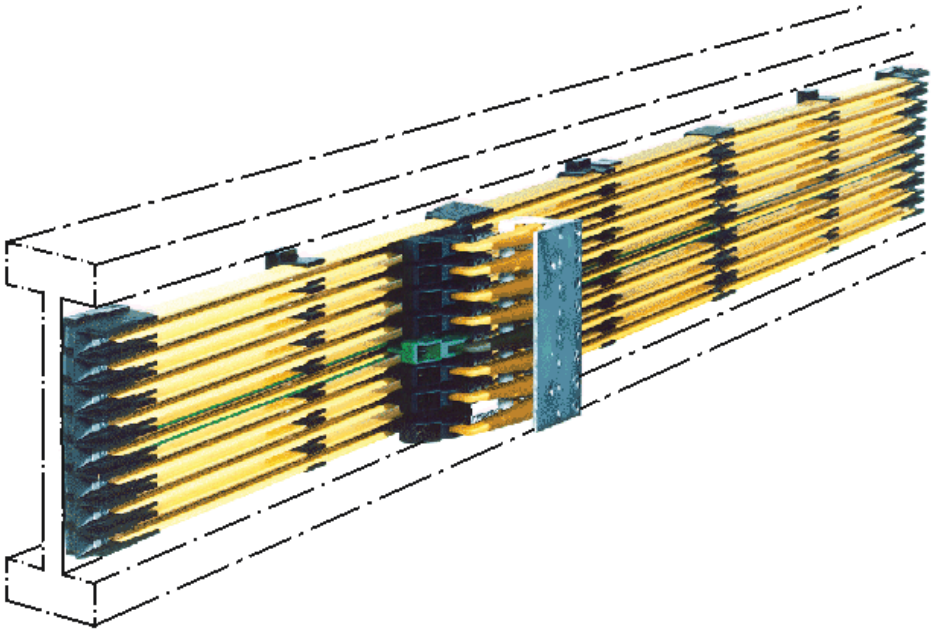

Installation Instruction

Single Pole Insulated Conductor Rail Programme 815

MV0815-0001b-E

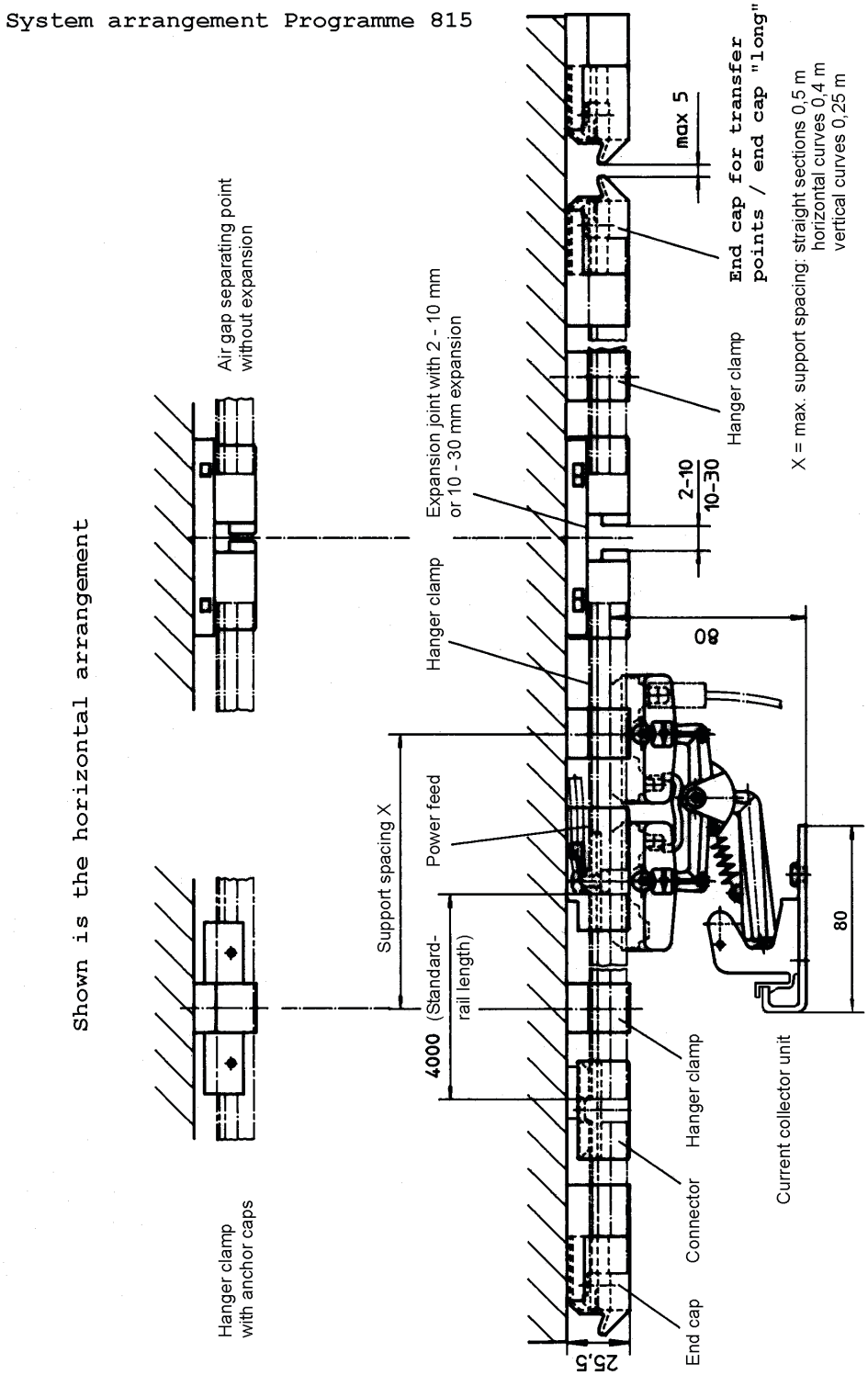

Single Pole Insulated Conductor Rail Programme 815

MV0815-0001b-E

2. Installation accessories

Simple systems without points and curves can be installed without any special tools as the conductor rails are supplied completely finished.

2.1 Bending device

The bending device is used for curving the conductor rails to produce vertical and horizontal rail arrangements. Electrically operated bending machines are also available for major assembly work.

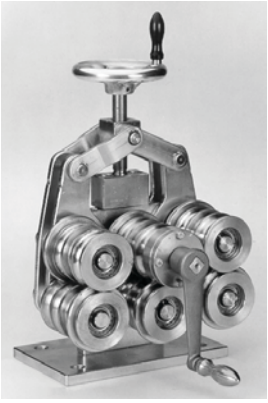

Design	Order Number	Weight [kg]
Bending device	081091	17,5

2.2 Disassembly tool

The disassembly tool is used to dismantle the conductor rails secured in the hanger clamps or end caps.

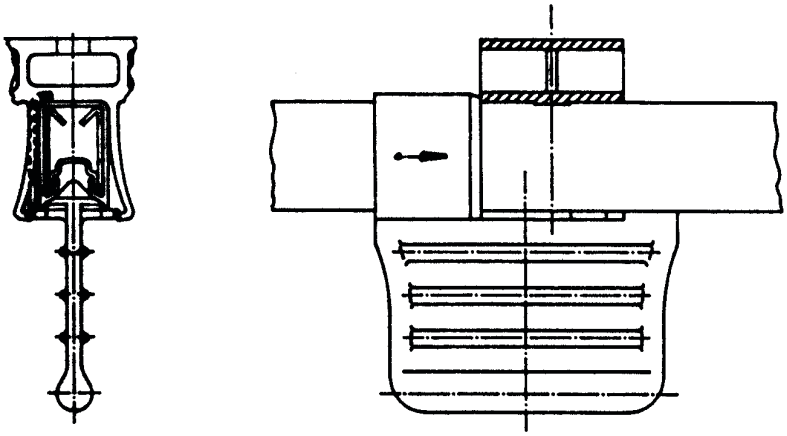

Disassembly tool in use

Single Pole Insulated Conductor Rail Programme 815

MV0815-0001b-E

3. Installation sequences

3.1 Hanger clamps

The hanger clamps designed as sliding supports are clicked, recessed or screwed, depending on the design, into the travel rail exactly at right angles to it. The support spacing is 0.5 m max. on straight sections and 0.4 m in curves (see page 3). The screw-in hanger clamps require ø 4.5 mm clearance holes for the M4 screws.

The same hanger clamps are required on both sides for air gap separating points and expansion joints in curves.

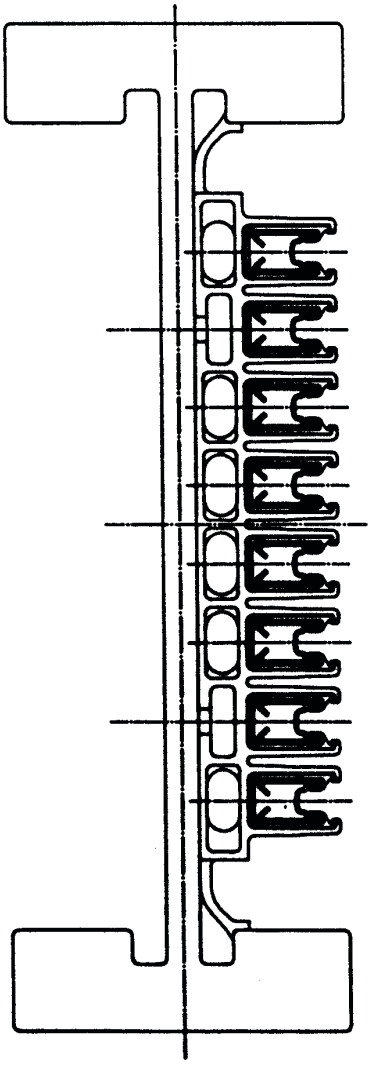

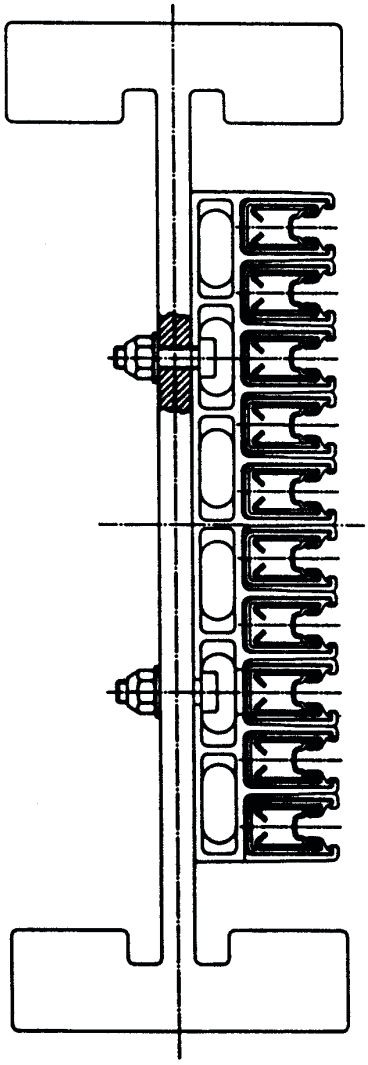

Single Pole Insulated Conductor Rail Programme 815

MV0815-0001b-E

3.2 Rail

3.2.1 Cutting the rail to length

The conductor rails are supplied in standard lengths of 4 m. Shorter lengths are available but are generally cut to length on site. To do so, please proceed as follows:

a) Measure length to be fitted (rail and insulation cover are equal in length).

b) Saw the metal rail and PVC insulation to length from the sliding surface side using a fine-toothed hack saw.

c) Deburr the sawn end with a fine file; chamfer the contact surface or the entire rail to approx. 0.3 - 0.4 mm x 15° in order to guarantee perfect transition of the shoe at the rail joint.

d) Blow out the section well and remove all metal chips.

3.2.2 Bending the rail

Curves can be produced both at the works and on site. They are made using the three-roller bending device 081091.
Electrically operated bending machines are available on request for extensive installation work.

Vertical arrangement

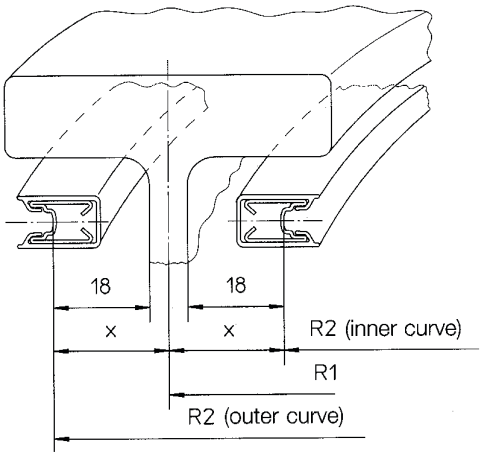

Horizontal arrangement

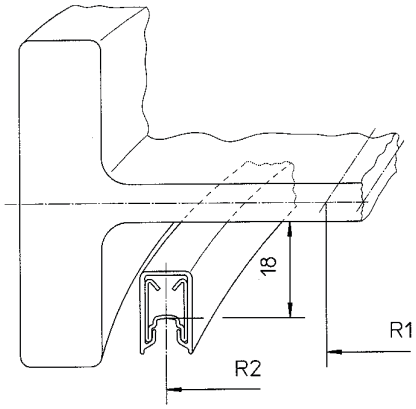

Single Pole Insulated Conductor Rail Programme 815

MV0815-0001b-E

Vertical curves with a bending radius of 450 mm to ∞ and horizontal curves from 1000 mm to ∞ are possible.
In order to avoid undesirable deformation of the conductor rail, the plastic insert provided must be introduced beforehand into the sliding surface slot for producing horizontal curves and removed again after the bending process.

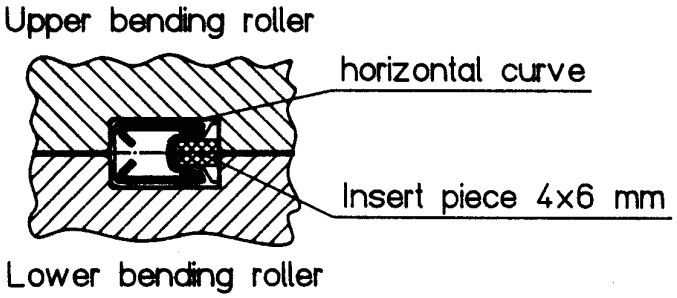

Work sequence for producing curves on site:

a) First, mark out the desired radius on a flat surface (e.g. floor).

b) When producing horizontal curves, introduce the plastic insert into the contact surface slot of the conductor rail with the insulation cover fitted.

c) Raise the upper bending roller by turning the adjusting spindle until the rail section can be inserted into the recess provided in the lower roller.

d) Lower the upper bending roller and move the rail section forwards and backwards.

e) This operation is repeated until the desired radius is obtained.

f) All the subsequent rail sections which are to be provided with the same radius can now bent with this setting.

It is possible to produce curves with straight sections in one piece without connectors.

Single Pole Insulated Conductor Rail Programme 815

MV0815-0001b-E

3.3 Connectors

3.3.1 „Screw-in“ connector

The rail connectors, which are readily accessible from the front of the conductor rail, are of the screw-in type.
The connector, which is easily detached with a size 3 hexagon socket screw key, is introduced into the partially mounted conductor rail with insulation cover. Then the connector cap to protect against contact is pushed halfway over the insulation cover. The next rail section is now pushed into the free end of the connector cover and fitted into the hanger clamp. The M4 hexagon socket screw must be tightened to 2 Nm.
The elasticity of the connector cover also allows it to be refitted after connector assembly. The cover is secured against displacement and the screw head always sits lower than the rail sliding surface.

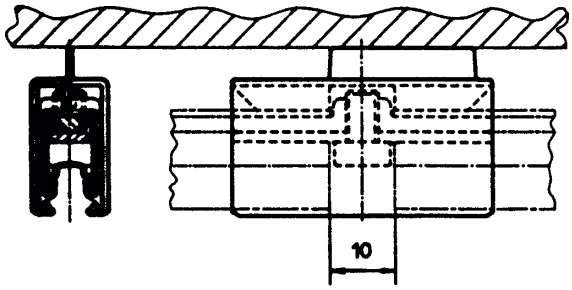

Should the connector cover not rest on the track section, hanger clamps are to be positioned at a max. spacing of 200 mm on both sides of the connector point.

Lengths which are cut to size on site are to be prepared as described in sections 3.2.1 c and d.

3.3.2 „Plug-in“ connector

The plug-in connector is pressed firmly into the mounted rail. It is imperative to ensure that the side without a recess (see diagram) is introduced first. The connector cap is used in the same way as described under 3.3.1.

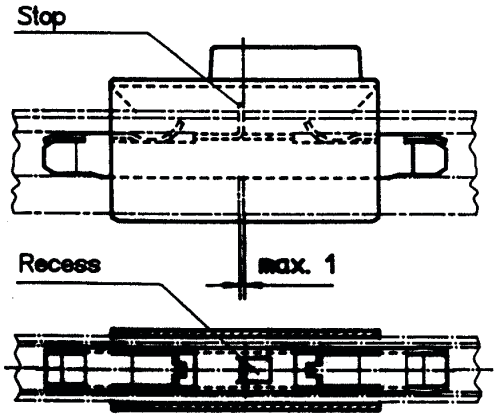

The next rail section is now pushed over the free end of the connector and into the free end of the connector cover. The entire unit fitted into the next hanger clamp.
The plug-in connector is designed so that reliable mounting and optimum current transmission are guaranteed.
If a connection with a plug-in connector is opened, the connector has to be replaced through a new one!

3.4 Anchor cap

a) The anchor caps are mounted on the left and right of the hanger clamp. The hanger clamp must be screwed to the track section. The anchor cap is provided with a 3 mm ø hole which serves as a gauge when fixing the anchor cap. A hole is made with a 3 mm ø drill through the insulation cover and rail using the hole provided in the anchor cap. Then the anchor cap is mounted on the insulation cover by turning in such a way that the pin of the anchor cap engages in the 3 mm ø hole in the insulation cover.

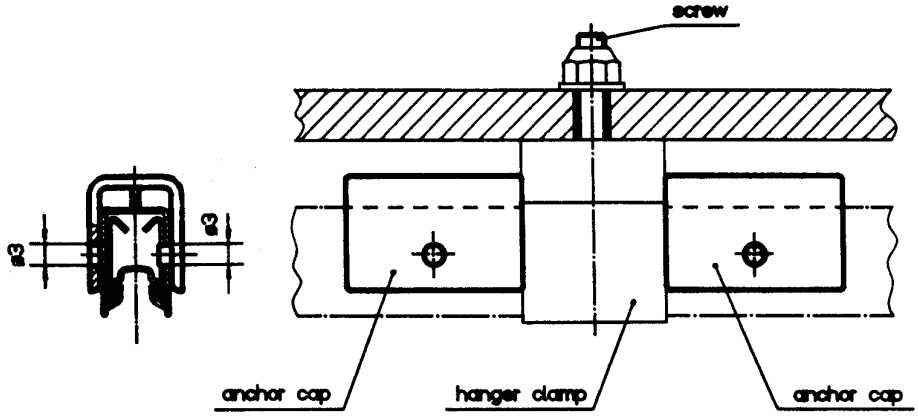

b) <u>Assembly of the anchor cap 081531 in 10-pole installations</u>

For space reasons the anchor caps for 10-pole installations are to be arranged on 2 hanger clamps as shown below.

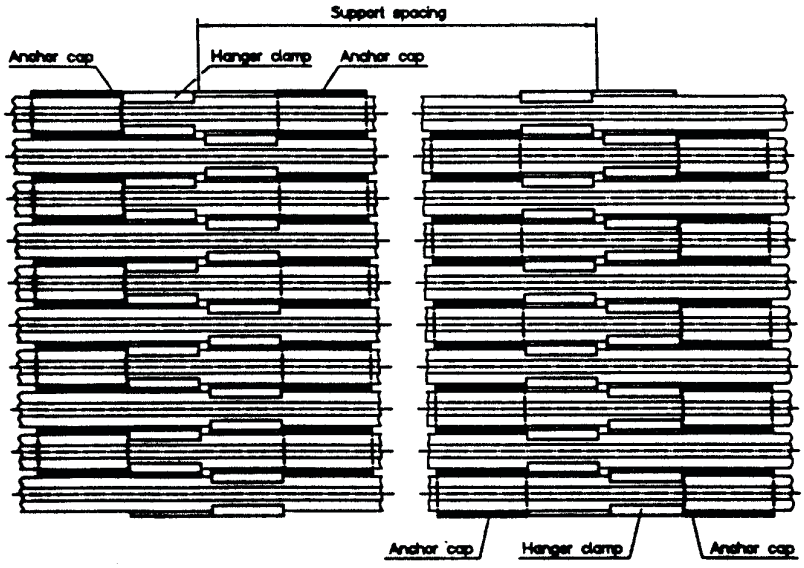

Single Pole Insulated Conductor Rail Programme 815

MV0815-0001b-E

3.6 Air gap separating point and expansion joint

3.6.1 Air gap separating point without expansion and jumper cable

Air gap separating points can be inserted at any position. If used in a curve section, 2 additional hanger clamps are required.
Separating points can also be provided at a future date. A piece of rail 46 mm long is cut of the rail at the desired location. The ends must be completely deburred!

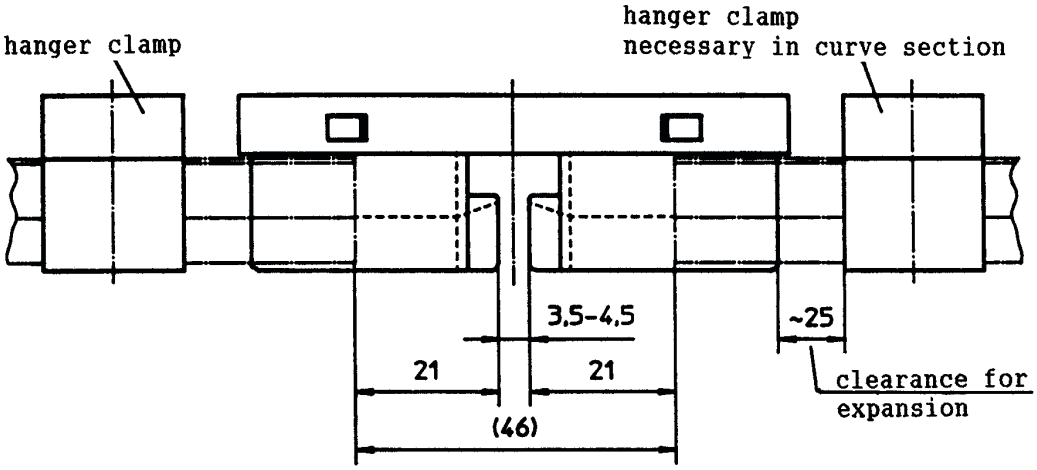

The air gap separating points, which are readily accessible from the front side of the conductor rail, are of the screw-in type. The power feed terminals are loosened slightly using a size 3 hexagon socket screw key, size 3. If used as a feeder cable, the connection cable is to be connected to the terminal parts.

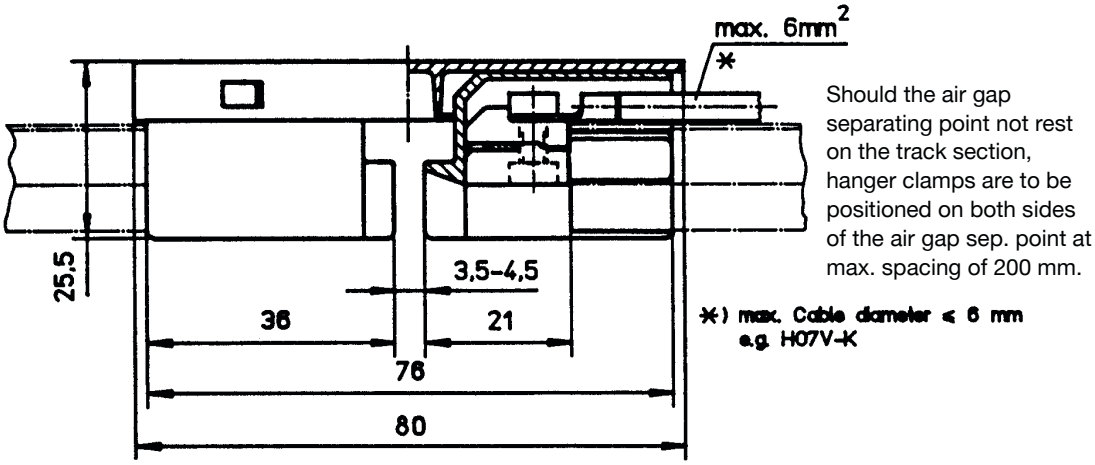

Should the air gap separating point not rest on the track section, hanger clamps are to be positioned on both sides of the air gap sep. point at max. spacing of 200 mm.

Now introduce the feeder terminal into the end cap in such a way that the lug engages the window provided. After the feeder terminal together with the cover has been pushed onto the open rail piece with insulation cover and has been adjusted in the separating point jumper, the M4 hexagon socket screw is tightened to 2 Nm.

Single Pole Insulated Conductor Rail Programme 815

MV0815-0001b-E

3.6 Air gap separating point and expansion joint

3.6.1 Air gap separating point without expansion and jumper cable

Air gap separating points can be inserted at any position. If used in a curve section, 2 additional hanger clamps are required.
Separating points can also be provided at a future date. A piece of rail 46 mm long is cut of the rail at the desired location. The ends must be completely deburred!

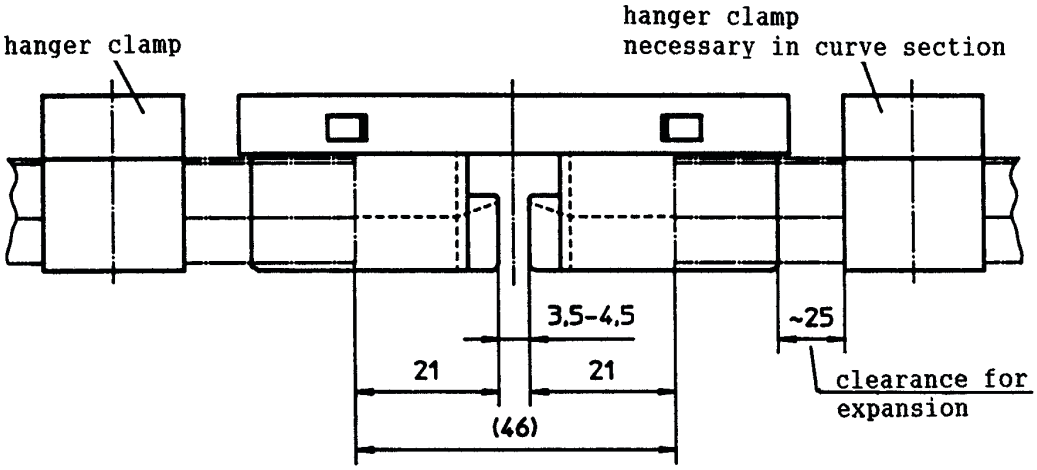

The air gap separating points, which are readily accessible from the front side of the conductor rail, are of the screw-in type. The power feed terminals are loosened slightly using a size 3 hexagon socket screw key, size 3. If used as a feeder cable, the connection cable is to be connected to the terminal parts.

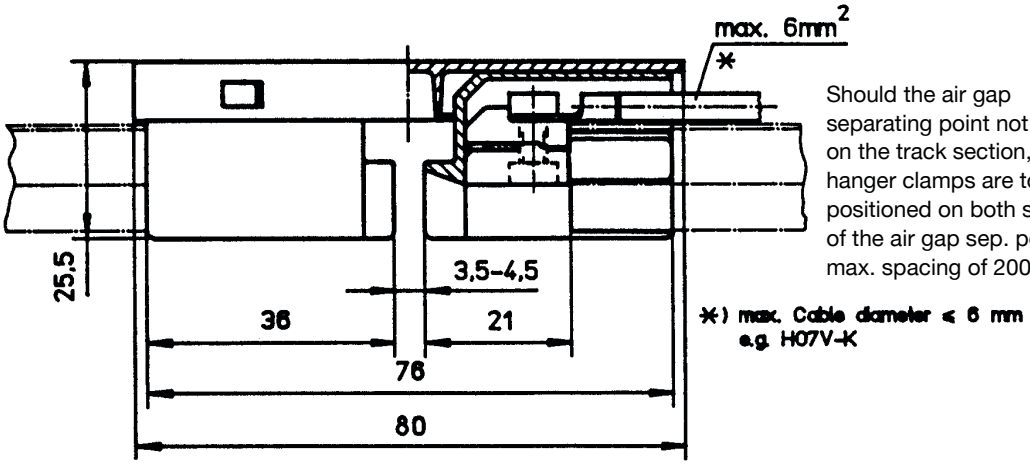

Should the air gap separating point not rest on the track section, hanger clamps are to be positioned on both sides of the air gap sep. point at max. spacing of 200 mm.

Now introduce the feeder terminal into the end cap in such a way that the lug engages the window provided. After the feeder terminal together with the cover has been pushed onto the open rail piece with insulation cover and has been adjusted in the separating point jumper, the M4 hexagon socket screw is tightened to 2 Nm.

3.6.2 Air gap separating point with expansion and jumper cable

The expansion joints electrically separate 2 rail sections in order to absorb changes in length of the rail system caused by the temperature. If power is not supplied individually into the two separated sections, electric jumpering is required.
The jumper cables are supplied in various lengths for the individual poles.

A) Expansion joint with 8 mm expansion capacity

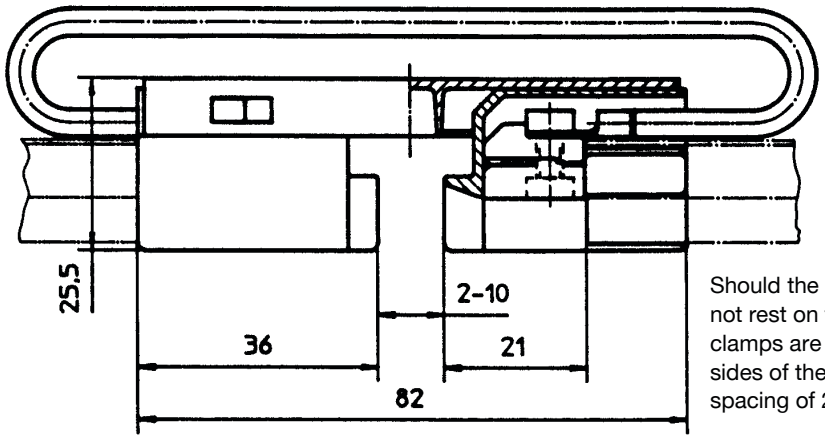

Should the air gap separating point not rest on the track section, hanger clamps are to be positioned on both sides of the air gap sep. point at max. spacing of 200 mm.

The individual expansion joints are installed as already described under 3.6.1.
The cables are to be laid as shown in the diagram so that unhindered expansion is guaranteed. 2 hanger clamps are to be positioned in the expansion joint section spaced at max. 400 mm.

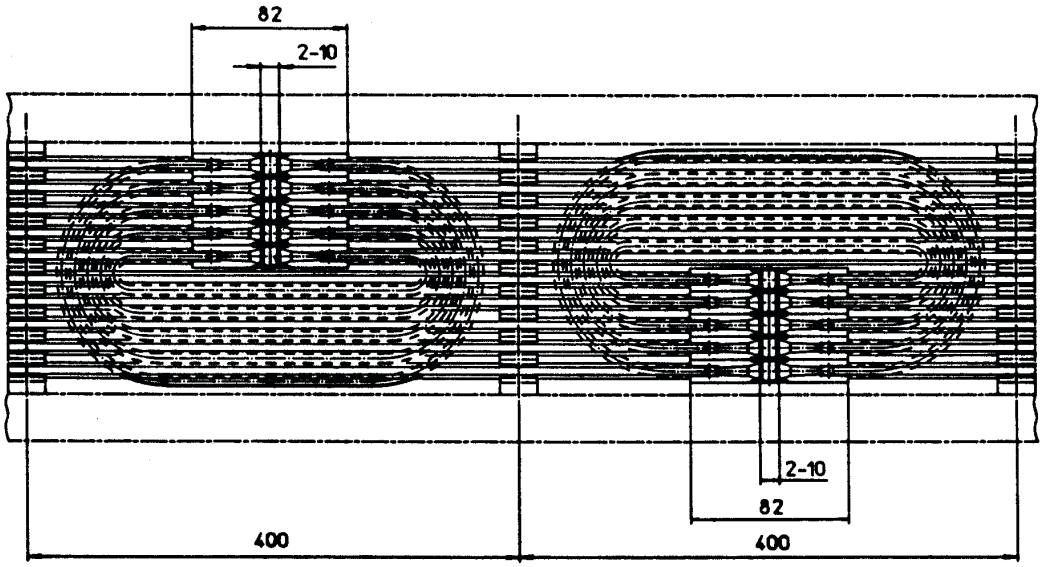

Single Pole Insulated Conductor Rail Programme 815

MV0815-0001b-E

a) Determining the number of expansion joints required
(8 mm expansion capacity)

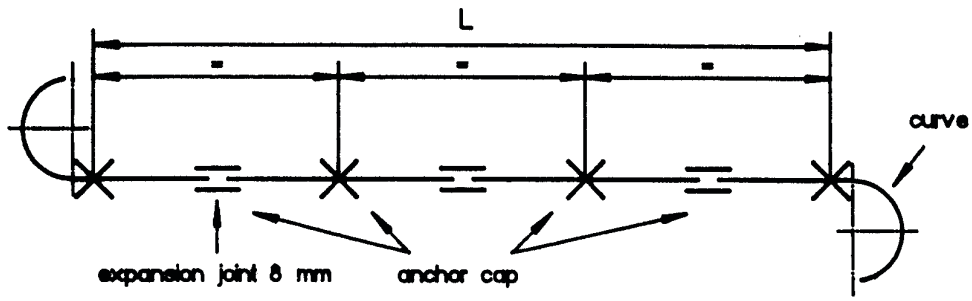

L = length / m*	Δt° 10	Δt° 20	Δt° 30	Δt° 40	Δt° 50	Δt ° 60
10	-	-	1	1	2	2
20	-	1	2	2	3	3
30	1	2	2	3	4	4
40	1	2	3	4	5	6
50	2	3	4	5	6	7
60	2	3	4	6	7	8

* Spacing between 2 anchor points e.g. end cap piece, curves (with 90° and 180° curves ≤ R 1000 mm the curves act as anchor points).

$\Delta t = \Delta t_a + \Delta t_{rail}$

Δt_a = Temperature range of the ambient temperature

Δt_{rail} = Temperature rise of the conductor rail

for 40% duty cycle Δt_{rail} = 10°C
for 65% duty cycle Δt_{rail} = 20°C
for 100% duty cycle Δt_{rail} = 30°C

Single Pole Insulated Conductor Rail Programme 815

MV0815-0001b-E

b) Gap setting for each expansion joint (8 mm expansion capacity)

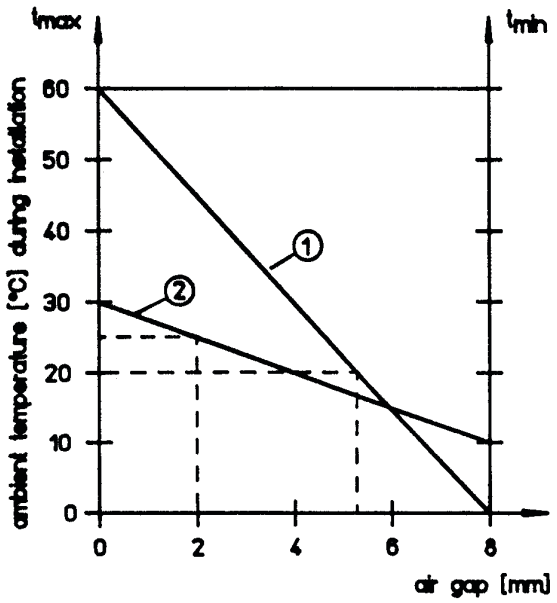

Legend:

t_{min} = lowest temperature which occurs in the application

t_{max} = highest possible operating temperature in the application

1. Draw a connecting line from t_{min} to t_{max}
2. Mark the ambient temperature during operation horizontally
3. Draw a line from the intersection vertically down and read the air gap to be set

Examples:

(1) = Temperature range from 0°C to +60°C.
Ambient temperature during install.: +20°C.
Air gap: ca. 5 mm

(2) = Temperature range from +10°C to +30°C.
Ambient temperature during install.: +25°C.
Air gap: ca. 2 mm

Single Pole Insulated Conductor Rail Programme 815

MV0815-0001b-E

b) Gap setting for each expansion joint (20 mm expansion capacity)

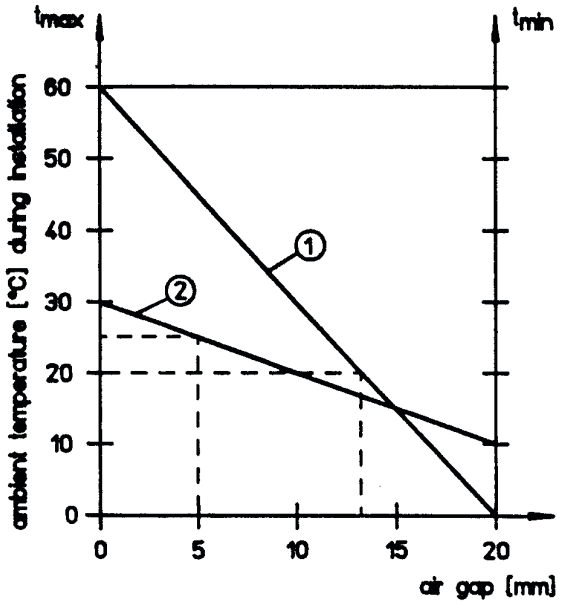

Legend:

t_{min} = lowest temperature which occurs in the application

t_{max} = highest possible operating temperature in the application

1. Draw a connecting line from t_{min} to t_{max}
2. Mark the ambient temperature during operation horizontally
3. Draw a line from the intersection vertically down and read the air gap to be set

Examples:

(1) = Temperature range from 0°C to +60°C.
Ambient temperature during install.: +20°C.
Air gap: ca. 13 mm

(2) = Temperature range from +10°C to +30°C.
Ambient temperature during install.: +25°C.
Air gap: ca. 5 mm

Single Pole Insulated Conductor Rail Programme 815

MV0815-0001b-E

a) Determining the number of expansion joints required
(20 mm expansion capacity)

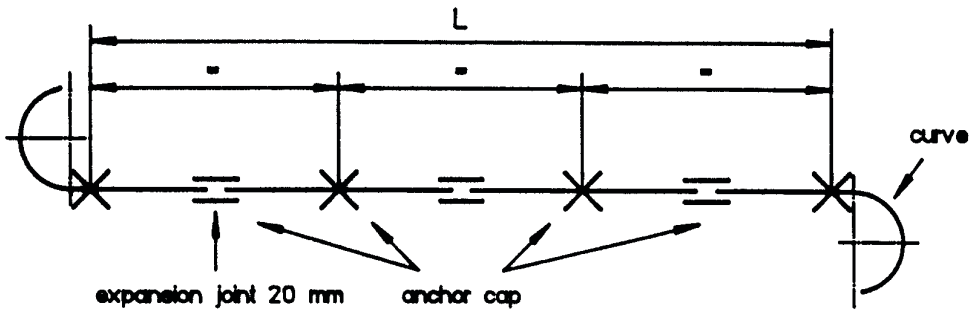

L = Length / m*	Δt° 10	Δt° 20	Δt° 30	Δt° 40	Δt° 50	Δt° 60
10	-	-	1	1	1	1
20	-	1	1	1	1	1
30	1	1	1	1	2	2
40	1	1	1	2	2	3
50	1	1	2	2	3	3
60	1	1	2	3	3	4

* Spacing between 2 anchor points e.g. end cap piece, curves (with 90° and 180° curves ≤ R 1000 mm the curves act as anchor points).

$\Delta t = \Delta t_a + \Delta t_{rail}$

Δt_a = Temperature range of the ambient temperature

Δt_{rail} = Temperature rise of the conductor rail

for 40% duty cycle Δt_{rail} = 10°C
for 65% duty cycle Δt_{rail} = 20°C
for 100% duty cycle Δt_{rail} = 30°C

Single Pole Insulated Conductor Rail Programme 815

MV0815-0001b-E

b) Gap setting for each expansion joint (20 mm expansion capacity)

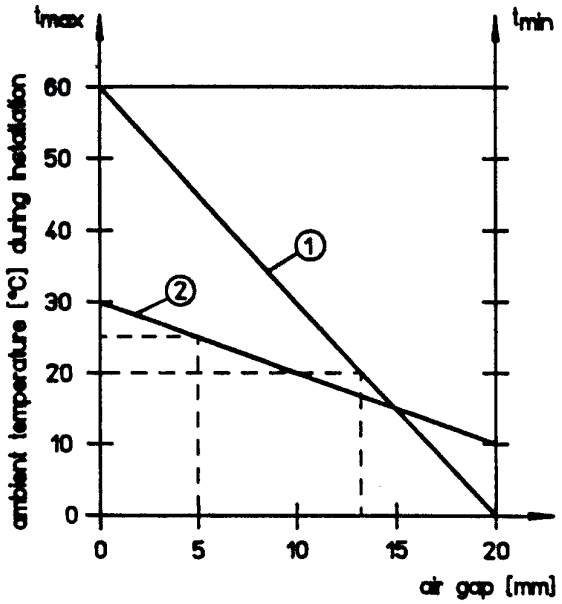

Legend:

t_{min} = lowest temperature which occurs in the application

t_{max} = highest possible operating temperature in the application

1. Draw a connecting line from t_{min} to t_{max}
2. Mark the ambient temperature during operation horizontally
3. Draw a line from the intersection vertically down and read the air gap to be set

Examples:

(1) = Temperature range from 0°C to +60°C.
Ambient temperature during install.: +20°C.
Air gap: ca. 13 mm

(2) = Temperature range from +10°C to +30°C.
Ambient temperature during install.: +25°C.
Air gap: ca. 5 mm

C) Expansion joints with 40 mm expansion capacity

This expansion point consists of 2 expansion joints each with a 20 mm expansion capacity. It is supplied completely assembled. Installation is performed as already described under 3.6.1 and 3.6.2.

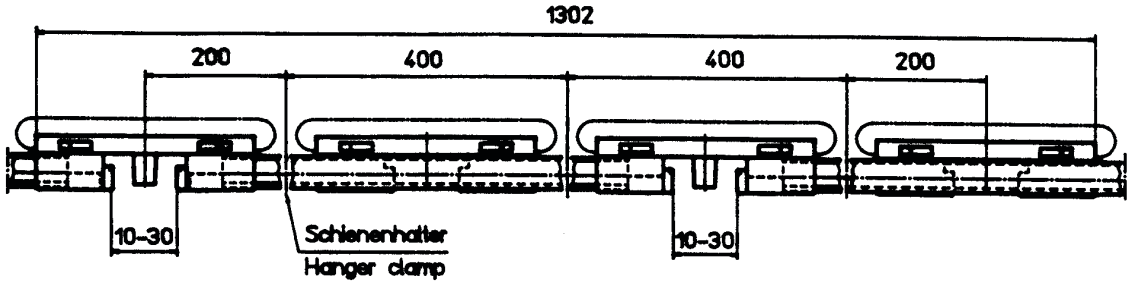

3.7 Transfer end cap

Transfer end caps serve as mechanical / electrical interruptions at transfer points and lifting stations. They are available with or without power feed; the crimp terminal is designed for max. 6 mm². Installation is performed as described under 3.6.
In order to guarantee a perfect transfer point of the current collectors, it must be ensured that the distance between the opposite end caps is not more than 5 mm and that the maximum lateral / vertical misalignment does not exceed 3 mm.

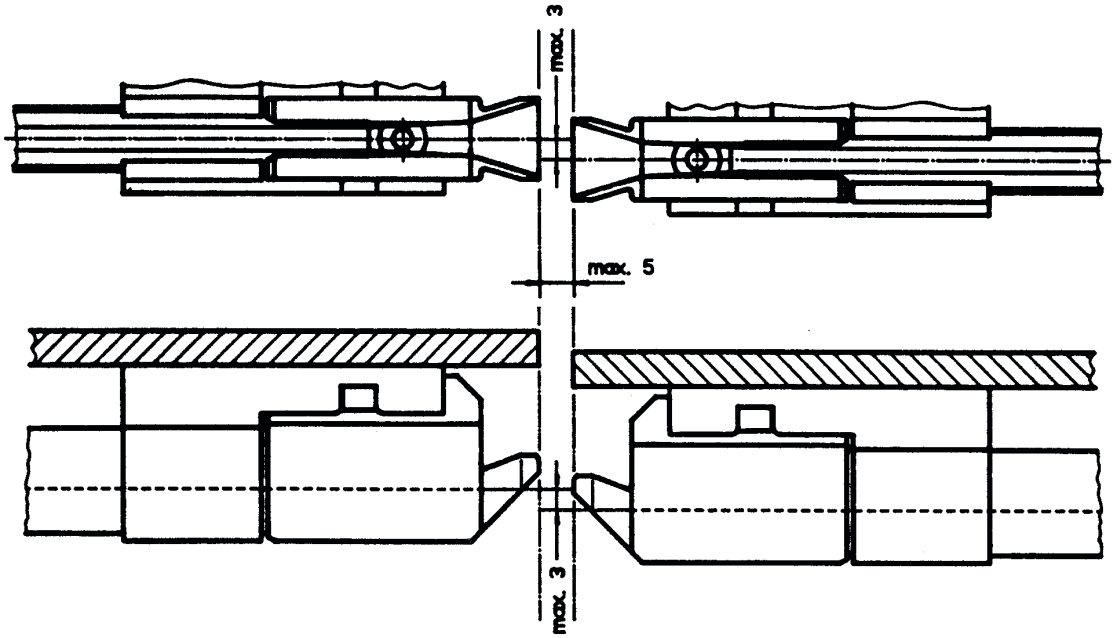

Single Pole Insulated Conductor Rail Programme 815

MV0815-0001b-E

a) Rail joint at right angles

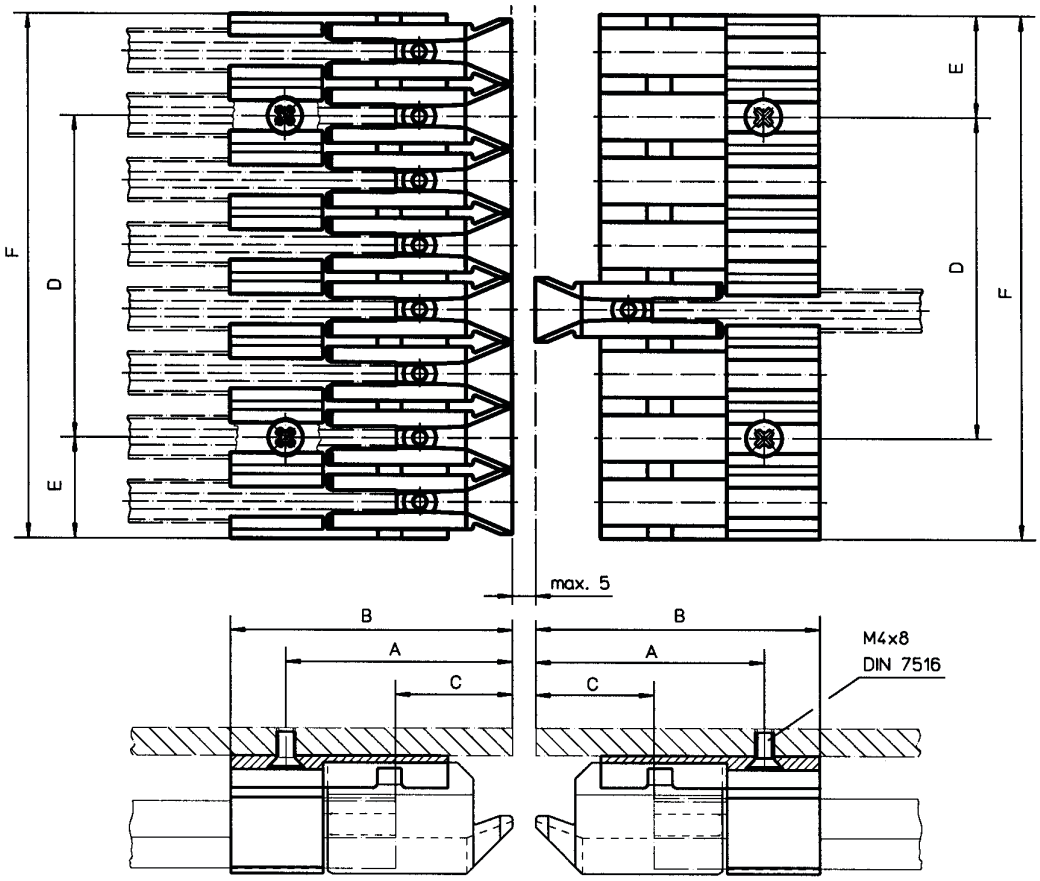

Installation dimensions	A	B	C	D	E	F
End cap set 8-pole	48.5	61	24	70	22	114
End cap set 10-pole	48.5	74	24	71.5	30	120

The funnel side of the end cap fixed in the end cap set must be flush with the beam end of the travel section and must under no circumstances protrude. The end cap set is secured in the rail web with 2 self-tapping screws M4x8 DIN 7516.

Hole diameter in aluminium rail: 3.6 mm ⌀
in steel - rail: 3.6 mm ⌀

Single Pole Insulated Conductor Rail Programme 815

MV0815-0001b-E

b) Rail joint, angled (45°)
(in general, the same applies as described under 3.7)

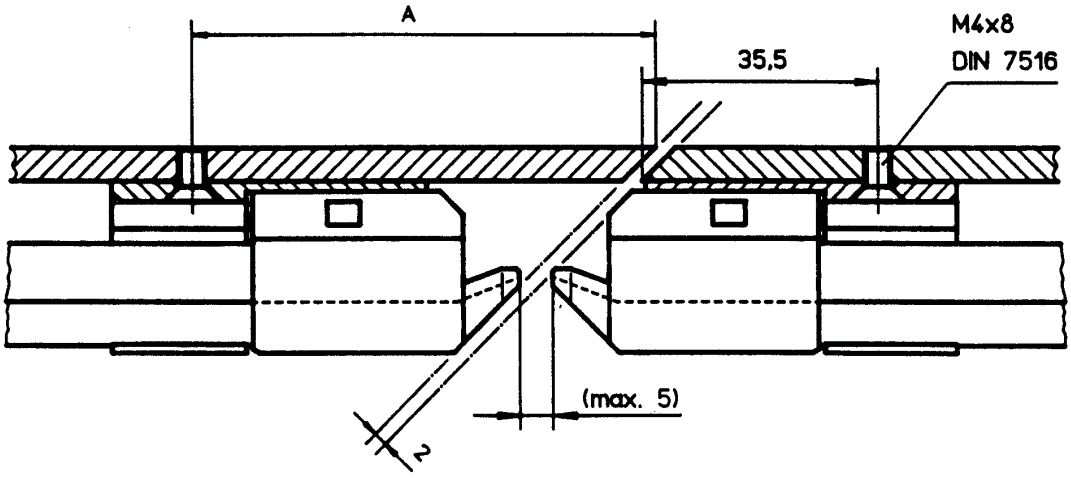

t	A
4	68,5
5	69,5
6	70,5
7	71,5
8	72,5

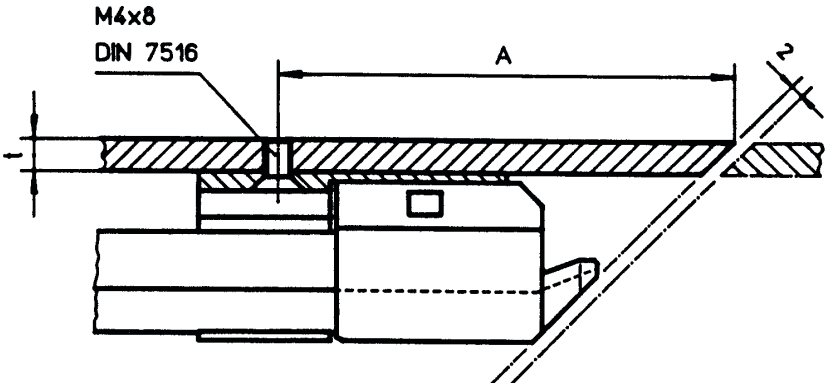

t	B
4	35,5
5	34,5
6	33,5
7	32,5
8	31,5

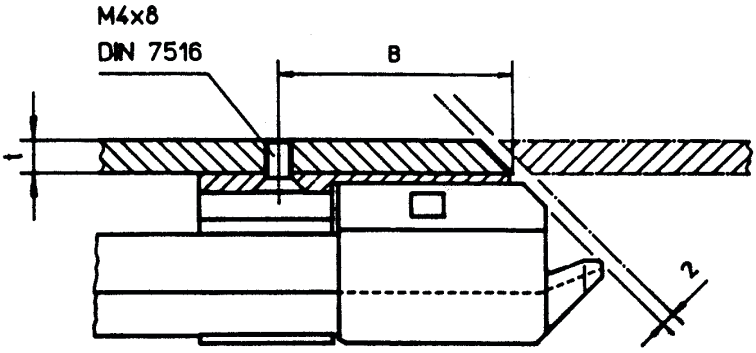

Single Pole Insulated Conductor Rail Programme 815

MV0815-0001b-E

3.8 Current collectors

Single and double-head current collectors fitted on a mounting bracket are available.
A maximum continuous load of 50 Amps is admissible.
The current collectors are supplied as standard 6, 8 and 10-pole units; maximum lateral / height displacements of ±10 mm can be accomodated.
The current collector units can be used for travel in both directions. For one-way travel they must be installed as trailing units.
The arrow on the shoe insulation indicates the direction of travel.

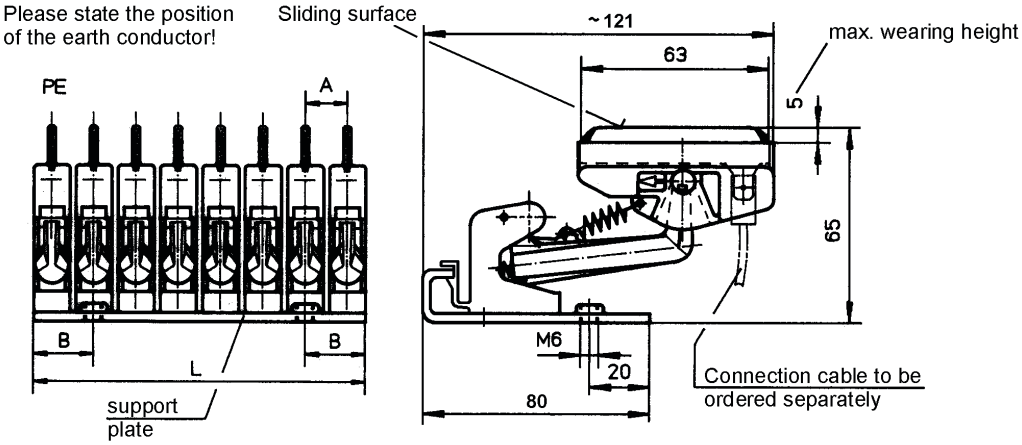

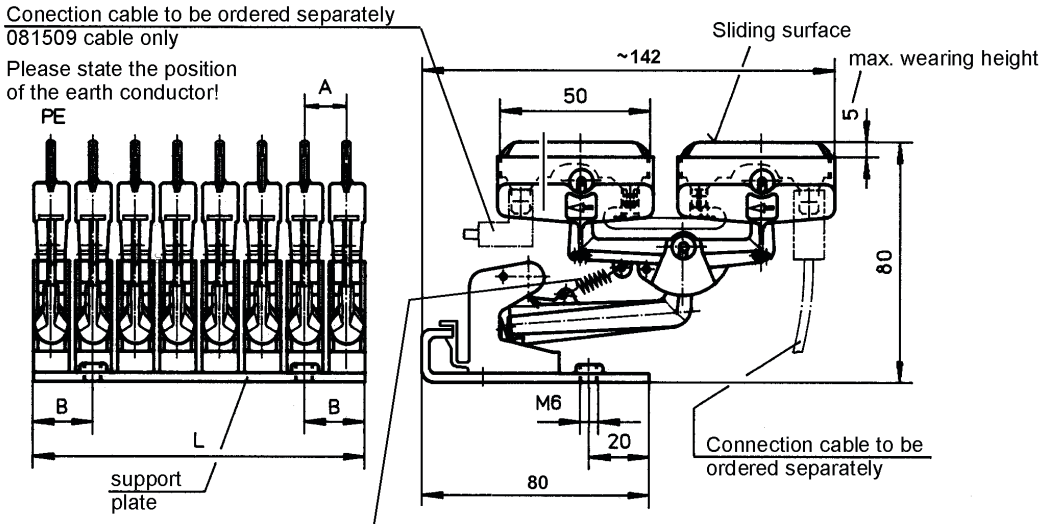

Poles	A [mm]	B [mm]	L [mm]
6	14	6	82
8	14	20	110
10	12	25	120

Trailing mode

Reversing mode

Always specify when ordering!

Single Pole Insulated Conductor Rail Programme 815

MV0815-0001b-E

It must be ensured that the connection cable cannot exert any tension, pressure or torsion on the current collector or collector shoe. If the collector shoe is worn out, the shoe insulation together with the collector shoe respectively the pair of collector shoes must be replaced. Please proceed as follows:

a) Pull connection cable off the connection lug on the collector shoe.

b) Pull the shoe insulation with worn out collector shoe respectively pair of collector shoes off the current collector arm.

c) Install the new shoe insulation with collector shoe respectively pair of collector shoes in reverse sequence. It is imperative to ensure that:

1. the arrow on the shoe insulation(s) is pointing in the direction of the current collector fixation;

2. when the two webs of the pair of collector shoes are snapped-in on the shoe insulations these will be placed between the two pins on both sides of the current collector arm. These two webs serve as a spring and secure the center position of the shoe insulations.

3.9 Collector shoe control unit

a) Description and function

The control unit is installed in the overhead monorail to ensure that worn collector shoes or missing current collectors are automatically detected by an electric signal.
Testing is performed using a contactless circuit with a plastic-sheathed solenoid switch mounted in a plastic housing. During operation each shoe triggers a pulse. Once the wear limit is reached, the operating distance to the initiator is too large and the missing control signal can be evaluated accordingly.
The control unit can only be used in conjunction with double current collectors 081504 / 05 / 08 and 09.

b) Installation

The unit is supplied completely assembled. It is attached to the overhead monorail with 4 screws. The rail is to be recessed beforehand in accordance with the following diagram:

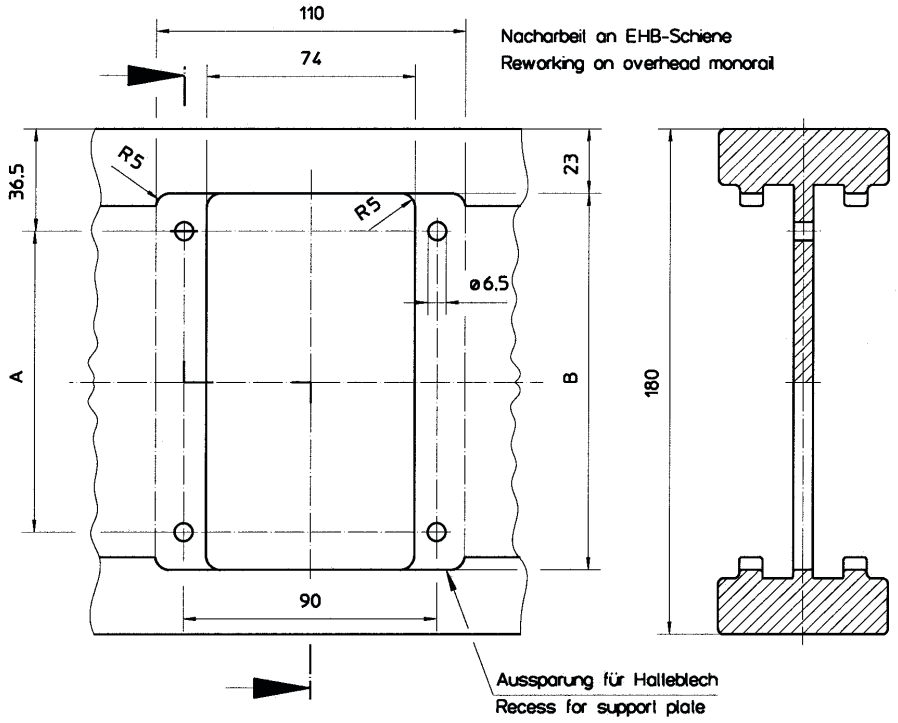

Collector shoe control unit	4 poles	6 poles	8 poles	10 poles
Rail spacing [mm]	14	14	14	12
A [mm]	42	70	107	107
B [mm]	68	95	134	134

Installation Instruction

Single Pole Insulated Conductor Rail Programme 815

MV0815-0001b-E

The conductor rail is removed at the installation point by 51 mm and inserted flush into the plastic body of the control unit. Hanger clamps and anchor caps are mounted on both sides. The initiators and the gap "m" are preset at the works.
If operating conditions require, the collector shoe control unit can be electrically fed.

with E = 5 mm here mount
2 washers 6.4 DIN 125

E = Web width	m	Number of shim rings DIN 988-8x14x0.5 steel
5	0	0
6	0,5	4
7	1,0	8
8	1,5	12

Hint:
The sensor of the control unit has to be connected in parallel connection!

x = 1.0 mm for copper graphite
0.5 mm for pure graphite

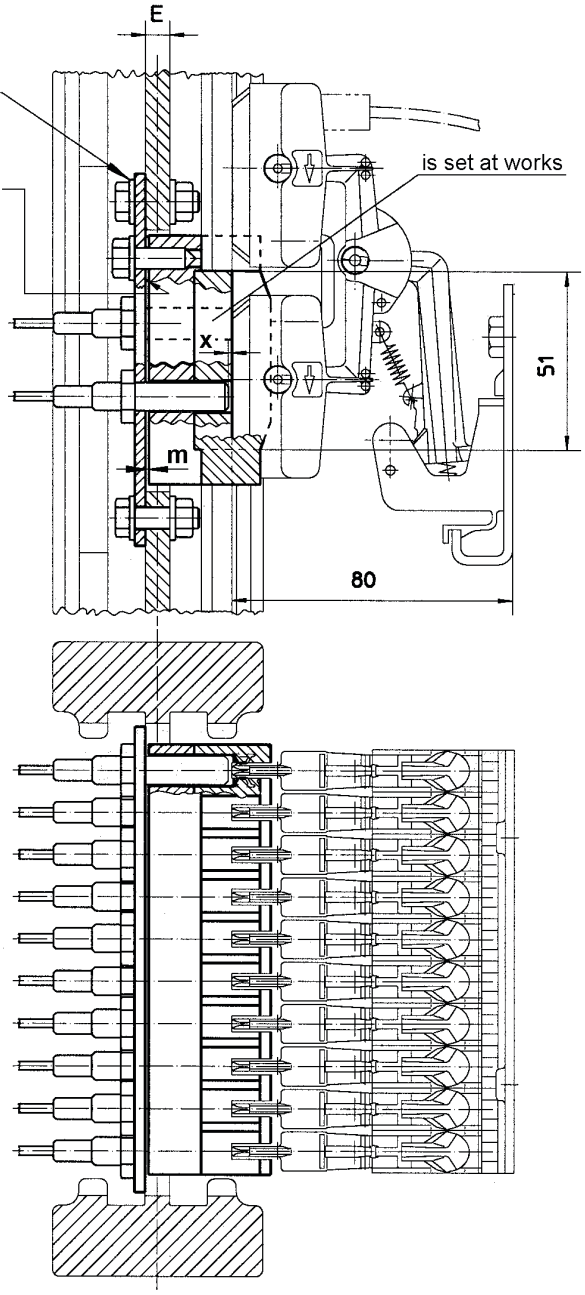

Use for double current collectors only!

Single Pole Insulated Conductor Rail Programme 815

MV0815-0001b-E

4. Check of installation

After completion of the installation all components, in particular all contact points, have to be checked for perfect operation and fit. The specified central installation position of the current collector is to be checked, too, as well as its movement tolerance of ± 10 mm.

At transfer points and switches it must be ensured that opposite rail ends are in exact alignment to prevent faults when the current collectors pass over.
Max. height and lateral displacement ± 3 mm.

When there is no support assembly on the track profile, it has to be checked, if, the track couplers, power feeds, separating and expansion points are equipped with hanger clamps on both sides (max. distance 200 mm). Complete if required.

5. Maintenance

If no collector shoe control unit is installed, abrasion of the collector shoe must be checked from time to time. In the event of any wear on the collector shoes up to the shoe insulation, these must be replaced.

During maintenance and cleaning work on the system, make sure that only solvent-free cleaning agents are used, which do not destroy plastics such as PVC, polycarbonates, polyamides etc.

Single Pole Insulated Conductor Rail Programme 815

MV0815-0001b-E

6. Photos of relevant parts

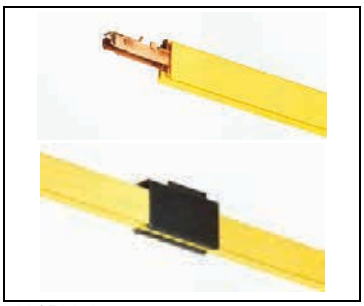

081526-6;
Rail conector „Plug-in type“

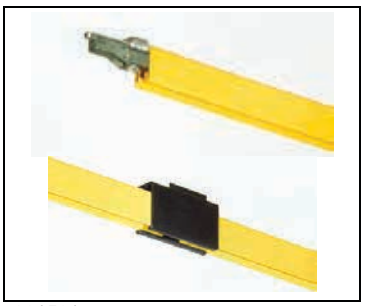

081521;
Rail conector „Screw type“

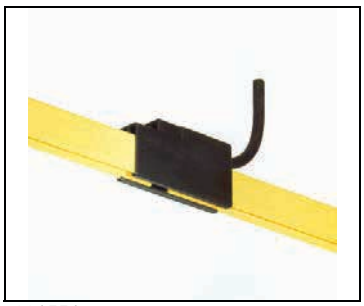

081551-...;
Power feed

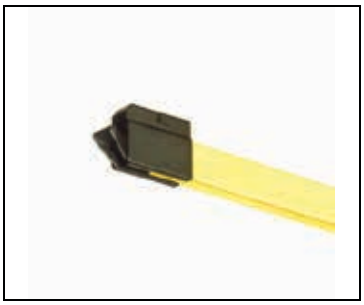

081574 / 081575-...; End cap for transfer points / end cap „long“; without and with power feed

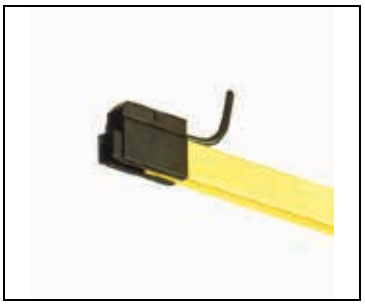

081577/ 081578...; End cap for transfer points / end cap „short“ without and with power feed

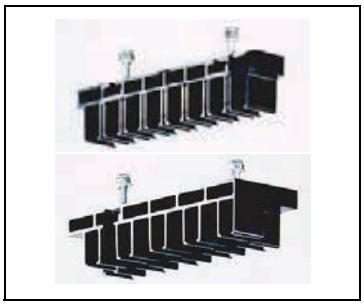

08-S280-... / 081543-...;
Hanger clamps 8 and 10 poles

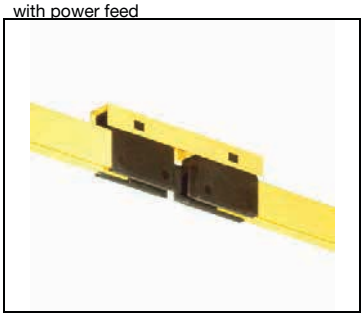

081594-...; Air gap separating point (with and without power feed)

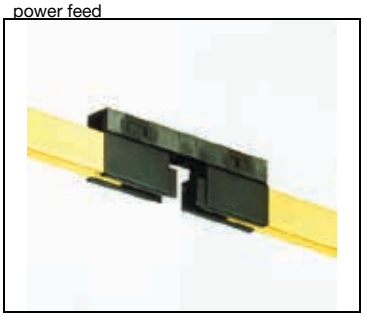

081561-...; Expansion joint wih 8 mm expansion

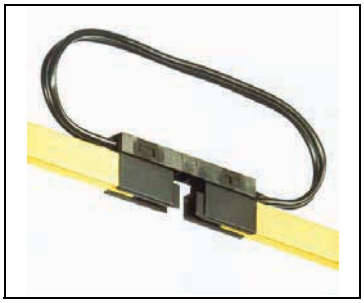

081562-...; Expansion joint with 20 mm expansion and jumper cable

081506-.../07-...; Current collector; single pole; terminal lug connection

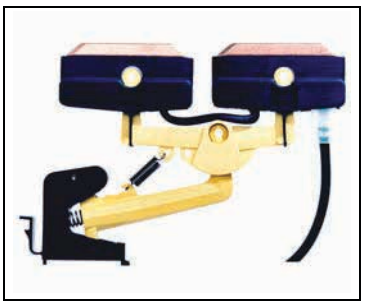

081508-.../09-...; Double current coll.; single pole; 2 term. lug connections

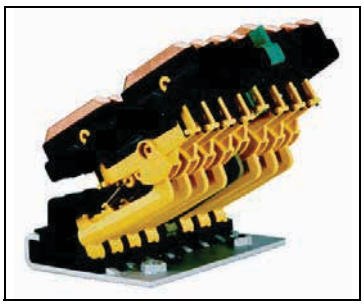

081508-.../09-...; Double current collector unit; 8 poles

www.conductix.us

USA / LATIN AMERICA
10102 F Street
Omaha, NE 68127

Customer Support
Phone +1-800-521-4888
Fax +1-800-780-8329

Phone +1-402-339-9300
Fax +1-402-339-9627

info.us@conductix.com
latinamerica@conductix.com

CANADA
18450 J.A. Bombardier
Mirabel, QC J7J 0H5

Customer Support
Phone +1-800-667-2487
Fax +1-800-442-9817

Phone +1-450-565-9900
Fax +1-450-851-8591

info.ca@conductix.com

MÉXICO
Calle Treviño 983-C
Zona Centro
Apodaca, NL México 66600

Customer Support
Phone (+52 81) 1090 9519
(+52 81) 1090 9025
(+52 81) 1090 9013

Fax (+52 81) 1090 9014

info.mx@conductix.com

BRAZIL
Rua Luiz Pionti, LT 05, QD.
L - Vila Progresso
Itu, São Paulo, Brasil
CEP: 13.313-534
Customer Support
Phone (+55 11) 4813 7330

Fax (+55 11) 4813 7330

info.br@conductix.com

Contact us for our Global Sales Offices

CONDUCTIX wampfler
DELACHAUX GROUP